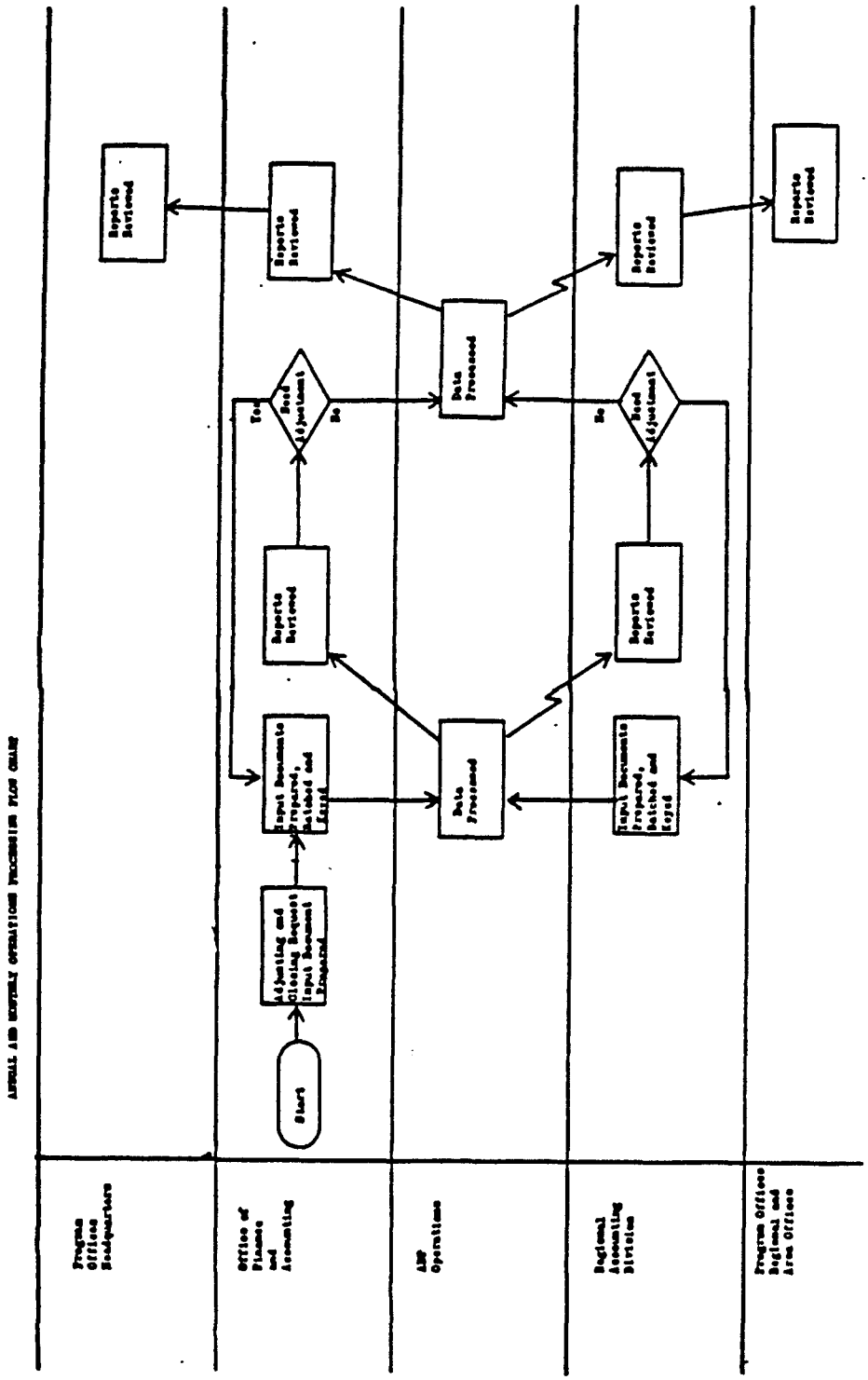ANNUAL AND MONTHLY OPERATIONS PROCESSING FLOW CHART